M4076DADNW

Monochrome Laser Multifunction Printer

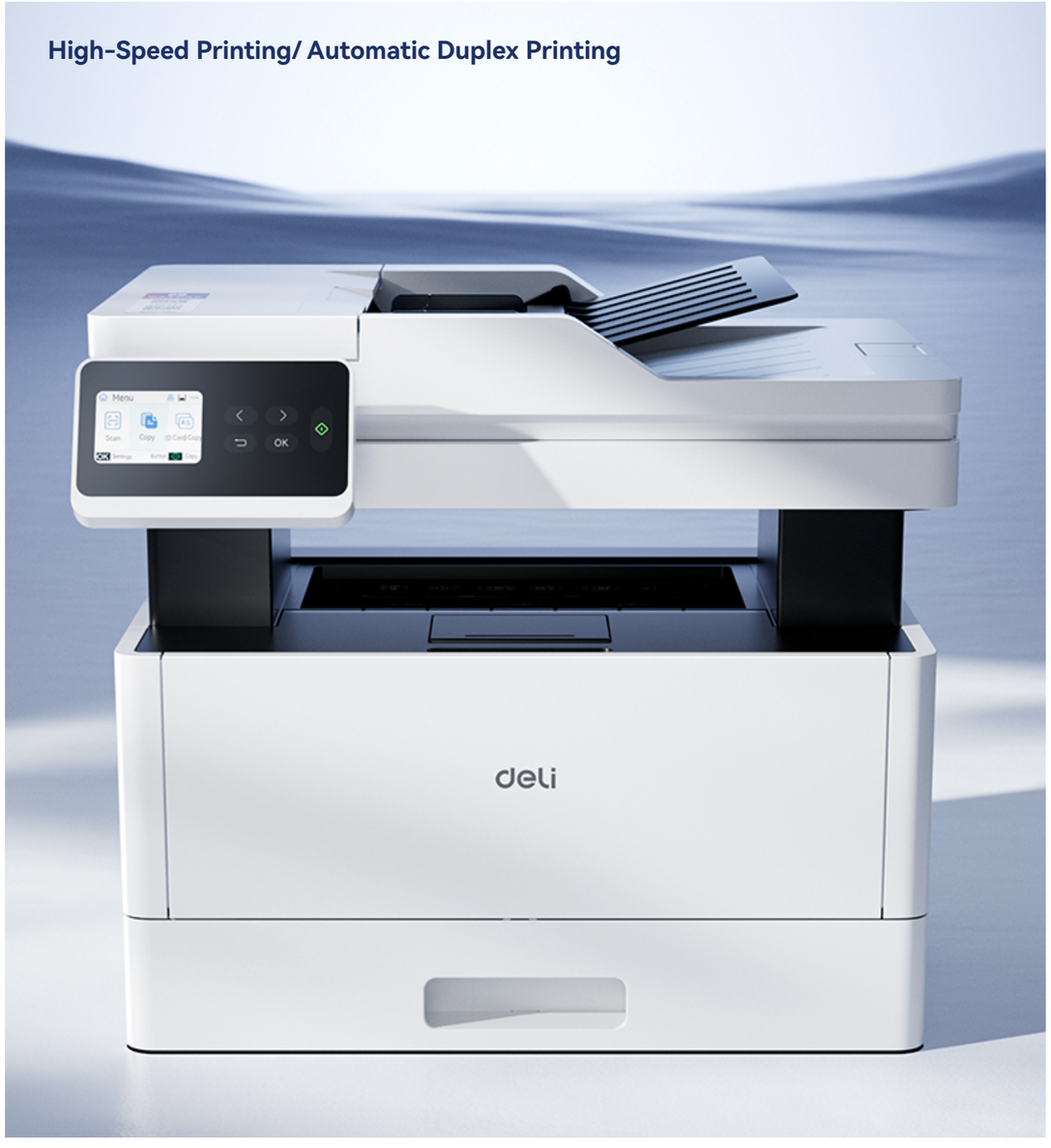

1200 dpi High-Resolution Printing

- Supports software-enhanced technology for significantly improved print precision, with a maximum resolution of up to 1200 × 1200 dpi

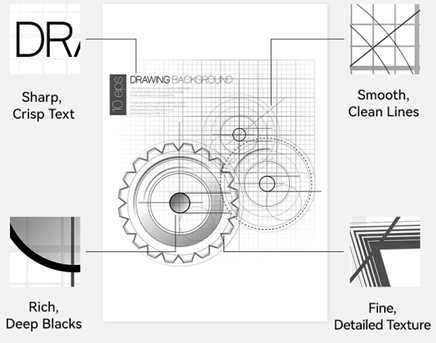

Automatic Duplex Printing

- Scan files can be transferred via USB or directly over the network

Effortlessly Handles High-Volume Workloads

1,000Pages
Continuous Print Capacity

80000Pages
Monthly Duty Cycle

1.2GHz
High-Speed Processor

512MB
Large-Capacity Memory

2.4" Full-Color Display

90°–35° Stepless Adjustment

Easily Adjust to Your Preferred Viewing Angle

Smart Document Processing Automatic Layout Adjustment

- Automatically handles documents with ease for optimal print quality

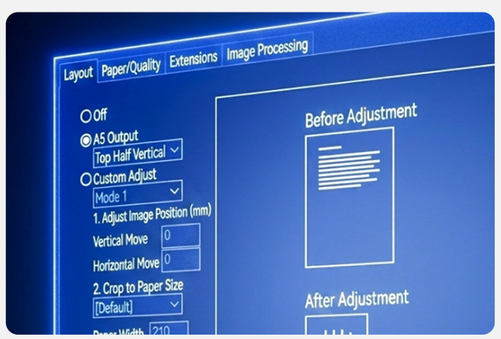

Smart Blank Page Filtering

Automatically skips blank pages in the document without printing them

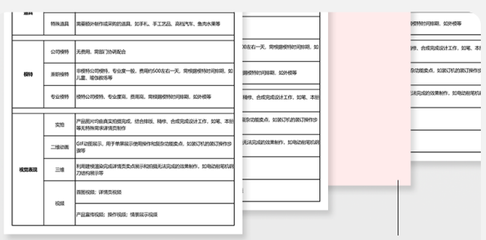

Blank Page
Automatically Skipped
Not Printed

Printing		M4076DADNW
Print Speed (A4)		40ppm A4
Print Speed (A5 long side)		62ppm A5
Auto-duplex Print Speed		20ppm A4
Print Resolution		600x600dpi, Software enhanced 1200x1200dpi
First Page Out Time		Less than 4S
Preheat Time		Less than 50S
Print Language		GDI,PCL6
Connectivity	USB	USB2.0
	Ethernet	10Base-T/100Base-TX
	WLAN	802.11b/g/n 2.4/5.0GHz
Operating Systems	Windows	Windows Vista, Windows 7, 8.1, 10,11 Windows Server 2012、2016、2019、2022
	RedOS	√
	Astra Linux (Update later)	√
	MacOS (Update later)	√
	iOS	Deli Print APP
	Android	Deli Print APP
General		
SOC Chip		LS2P0300
CPU		1.2GHz
RAM Size		512MB
Monthly Duty Cycle		80000Pages
Control Panel		2.4" LCD Screen
Paper Related		
Paper Type		Plain Paper, Thick Paper, Thin Paper
Paper Cassette Capacity(*1)	Input Tray	250Pages
	Output Tray	100Pages
	Manual Feeder	50Pages
	Auto Feeder(ADF)	50Pages
Paper Size	Input Tray	A4、A5、A6、B5、B6 (JIS)、B5 (ISO)、B6 (ISO)、16K、16K、16K、32K、Executive、Letter、Folio
	Manual Feeder	A4、A5、A6、B5、B6 (JIS)、B5 (ISO)、B6 (ISO)、16K、16K、16K、32K、Executive、Letter、Legal、Folio、C5 envelope、C6 envelope、C65 envelope、Monarch envelope、#10 envelope、Envelope DL、Envelope Tax、Postcard
	Auto Feeder	Width 105-216mm Length 148-356mm
	Auto-duplex print	A4、Letter
	Customized	Width 76-216mm Length 148-356mm
Paper Weight	Input Tray	65-100g/m2
	Auto-duplex print	70-80g/m2
	Manual Feeder	65-200g/m2
	Auto Feeder	70-90g/m2
Copy		
Copy Speed		36ppm A4
First Copy Out Time		Less than 15S
Copy Resolution		600x600dpi, 1,200x600dpi(Photo Mode)
Copies		1-99
Duplex Copy		Yes
N in 1 Copying		2 in 1 landscape、2 in 1 portrait、4 in 1 landscape、4 in 1 portrait
ID Copying		Yes
Scaling		25~400%
Scan		
Scan to USB Flash Drive		NA
Scan to Email (Update later)		Yes
Scan to PC		Yes
Scan Mode		CIS
Scan Resolution		1200x1200 dpi
Scan Color scale		24 bit
Scan Format		JPG、PNG、BMP、PDF、TIF
Scan Preview		Yes
Auto-duplex Scan		Yes
ADF Scanning Speed（A4）(*2)		20/40sides/min
Environment		
Operating	Temp.	5~35℃（suggest 16~32℃）
Atmos.	Humidity	20%~80%（suggest 30%~70%）
Rating Voltage/Current		220V-240V 4.3A 50Hz
Power Consumption	Working	TBD
	Sleeping	TBD
Noise	Printing	60db
	scanning	TBD
	standby	TBD
Baisc Specs		
Product Size(L*W*H)		420x363x362mm
Packing Size(L*W*H)		520x440x450mm
N.W.		10.6kg
G.W.		12.8kg
Consumables		
Consumables capacity	Seperate Retail	T407：3500Pages(refill) T407XL:7000Pages(refill) T407XH：10000Pages
	Packed with machine	T407XL:7000Pages(refill)
	Refill Toner	T407R：3500Pages
Packagings		
Packagings		Printer*1，Product Safety Manual*1, Quick Using Manual*1, Warranty card*1， Power cord *1, USB*1